ISSN 1041-9489

SAFETY BRIEF

January 1994

Volume 9, No. 3

Triodyne Inc.
Consulting Engineers and Scientists
5950 West Touhy Avenue Niles, IL 60714-4610 (708) 677-4730
FAX: (708) 647-2047

On the Problem of Guarding Three Roll-Bending Machines*

by Dennis B. Brickman** and Ralph L. Barnett†

Abstract

This paper addresses the position statement given in the ANSI B11.12-1983 standard for roll-bending machines: "No universal method of safeguarding the point of operation for general-purpose roll benders is known at this time." Using universal guards developed by Bethlehem Steel and the U.S. Naval Academy, experiments were conducted which identify new hazards introduced by the proposed guards. The results support the ANSI hypothesis and suggest directions for fashioning barrier guards for dedicated three roll benders.

INTRODUCTION

The mandate of engineers is to serve mankind and when their works cause damage and injury, the associated industry, their manufacturers, and their designers are all diminished. Engineers are bound by their code of ethics to hold paramount the safety, health, and welfare of the public in the performance of their professional duties. One of the most significant ways they have met this obligation is to develop voluntary consensus standards. In the case of the three roll bender, a machine which converts plates into cylinders, the American National Standards Institute has created Standard ANSI B11.12-1983 Safety Requirements for Construction, Care, and Use of Roll-Forming and Roll-Bending Machines. One of the principal hazards associated with roll benders is the inrunning nip which first accepts the typically hand-fed workpiece. ANSI B11.12-1983 requires one or more of the following point-of-operation safeguards: guards, devices, awareness barriers, and emergency stop devices. Appendix E6.1[1] contains an unusual comment which is at once a confession and a challenge: "No universal method of safeguarding the point of operation for general purpose roll benders is known at this time."[1]

Reprinted with the permission of the American Society of Mechanical Engineers:

* ASME Paper 92-WA/SAF-3, presented at the Winter Annual Meeting, November 9, 1992-Anaheim, CA.

** Mechanical Engineer, Triodyne Inc., Niles, Illinois.

† Professor, Mechanical and Aerospace Engineering, Illinois Institute of Technology, Chicago, Illinois.

[1] Mean thickness of galvanized sheet is 1.61 mm (0.0635 in.) for 16 gage and 4.27 mm (0.168 in) for 8 gage.

MECHANICAL ENGINEERING:
Triodyne Inc.
Officers
Ralph L. Barnett
Dolores Gildin
S. Carl Uzgiris

Mechanical Engineering
Peter Barroso Jr.
Dennis B. Brickman
Elizabeth J. Buhrmaster
Kenneth L. d'Entremont
Michael A. Dilich
Christopher W. Ferrone
Claudine P. Giebs
Suzanne A. Glowiak
John Goebelbecker
Crispin Hales
William F. Heilman
Gary M. Hutter
Brian D. King
Dror Kopernik
Woodrow Nelson
R. Kevin Smith
William G. Switalski
Paul Terronez
Andrew H. Tudor
James R. Wingfield
Leonard Zelek

Library Services
Sharon I. Meyer
Betty Bellows
Cari M. Coleman
Lucinda Fuller
Maureen Gilligan
Norene Kramer
Scott Kramer
Molly Kravetz
Florence Lasky
Kimberly Last
Neil Miller
Annette Schubert
Jackie Schwartz
Peter Warner

Information Products
Expert Transcript Center (ETC)
Cari M. Coleman
Glenn Werner
Shirley Werner
Contract Services
Sharon I. Meyer

Graphic Communications
Mary A. Misiewicz
Charles D'Eccliss
Anthony R. Provenzano
Robin Stone
Christina Timmins
Lynn Wallace-Mills
Thomas E. Zabinski

Model Laboratory
2721 Alison Lane
Wilmette, IL 60091-2101
Robert Kaplan
Bill Brown
Mario Visocnik

Vehicle Laboratory
Charles Sinkovits

Photographic Laboratory
7903 Beckwith Road
Morton Grove, IL 60053
Larry Good

Business Systems
Maryalyce Skree
Sharon L. Mathews
Vicki Filichia
Chris Ann Gonatas
Jan A. King
Karen Kotsovetis

Special Projects
John K. Burge
Michael F. Mulhall

SAFETY RESEARCH
Institute for Advanced Safety Studies
5950 West Touhy Avenue
Niles, IL 60714-4610
(708) 647-1101

Chairman of the Board
Ralph L. Barnett

Executive Director
Leslie A. Savage

Director of Research
Thomas E. Waterman

Information Services
Sharon I. Meyer

Senior Science Advisor
Theodore Liber

Safety Brief Editor
Beth A. Hamilton

ENVIRONMENTAL ENGINEERING:
Triodyne Environmental Engineering, Inc.
5950 West Touhy Avenue
Niles, IL 60714-4610
(708) 647-6748
FAX: (708) 647-2047

Officers/Directors
Gary M. Hutter
Ralph L. Barnett
S. Carl Uzgiris

Engineering/Science
Richard Gullickson
Bruce Hegberg
Diane Moshman
William D. Sheridan
Audrone M. Stake

Library/Research Services
Shelley Hamilton

FIRE AND EXPLOSION:
Triodyne Fire & Explosion Engineers, Inc.
2907 Butterfield Road
Suite 120
Oak Brook, IL 60521-1176
(708) 573-7707
FAX: (708) 573-7731

Officers/Directors
John A. Campbell
Reed B. Varley
Ralph L. Barnett
S. Carl Uzgiris

Chicago Office
John A. Campbell
Thomas H. Miller
Kim R. Mniszewski

Miami Office
1110 Brickell Avenue
Suite 430
Miami, FL 33131-3135
(305) 374-4091
FAX: (305) 358-9615
Reed B. Varley
Sheila Faith-Barry

Laboratory/Library
5950 West Touhy Avenue
Niles, IL 60714-4610
(708) 677-4730
Lucinda Fuller

MANUFACTURING:
Alliance Tool & Mfg. Inc.
91 East Wilcox Street
Maywood, IL 60153-2397
(312) 261-1712
FAX: (708) 345-4004

Officers
S. Carl Uzgiris
Ralph L. Barnett

General Manager
Ramesh Gandhi

Plant Manager
Larry Shelley

Founders/Consultants
Joseph Gansacz
Albert Kanikula

CONSTRUCTION:
Triodyne-Wangler Construction Company Inc.
5950 West Touhy Avenue
Niles, IL 60714-4610
(708) 677-4730
FAX: (708) 647-2047

Officers/Directors
William A. Wangler
Joseph Wangler
Ralph L. Barnett
S. Carl Uzgiris

CONSULTANTS:
Richard M. Bilof, Ph.D.
Electromagnetic Compatability

R. A. Budenholzer, Ph.D.
Power and Energy

David W. Levinson, Ph.D.
Senior Metallurgical Advisor

W. Patrick Mc Vay
Medical Device
Engineering Consultant

Steven R. Schmid
Food Processing Equipment

In Case No. 86266066/CL55976 captioned James Leo Jackson vs. Streine Tool and Manufacturing Company set in the Circuit Court for Baltimore City, a number of investigators have proposed general purpose guarding concepts and this paper explores such proposals developed by Bethlehem Steel and the U.S. Naval Academy. Specifically, our paper concentrates on new hazards created and introduced by the guards themselves. The notion that a guard must not in and of itself create a new hazard has been traced from 1916 to the present where every safety entity from the United Nations down to the individual safety writer expresses this view.[2] Indeed, for roll-bending machines, ANSI B11.12-1983 states that every point-of-operation guard shall meet requirements including 6.2[2]: "It shall, in itself, create no pinch points between the guard and moving machine parts."[3] It will be shown that the proposed guards do not meet this criterion.

A testing program was developed to study the failure modes and effects of two proposed guarding systems. The severity of various shear hazards associated with the leading and trailing edges of the workpiece were demonstrated with the use of summer sausages. Pinch hazards, impact hazards, and drag-in hazards were self-revealing.

THREE ROLL BENDING

Machine Description

A typical three roll-bending machine is shown in Fig. 1 with the top roll in the open position which allows the removal of completed cylinders with or without overlap. A general purpose three roll-bending machine consists primarily of two driven front pinch rolls and a third driven rear bending roll which controls the radius of the corrugated or flat product. As the bending roll is moved closer to the top roll, the radius of the formed cylinder decreases. Outboard support for the top roll is provided by an end gate which swings away from the vertical position when it opens and releases the top roll. The end gate is opened and closed using a tethered foot control. The three rollers operate with a single speed in the forward or reverse direction. Some of the machines include a jog capability.

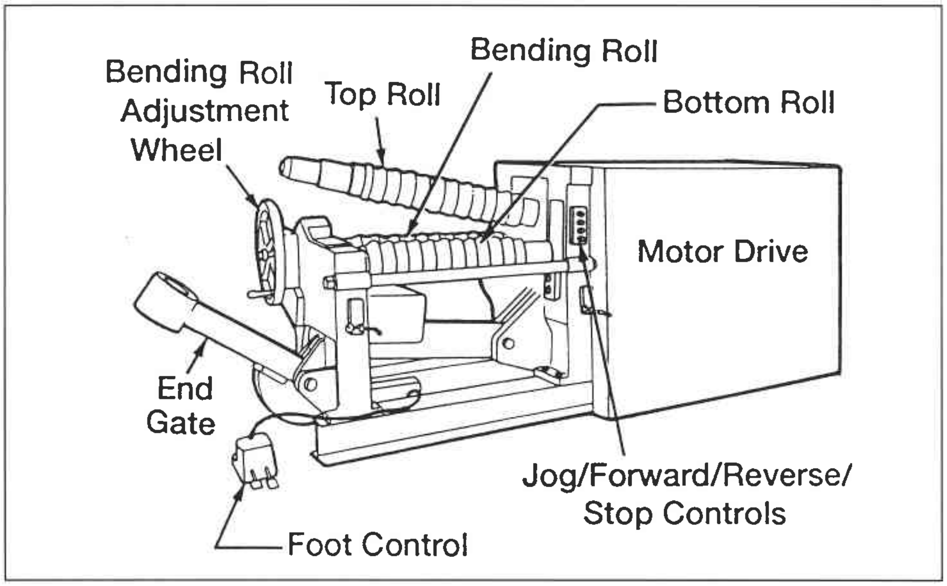

Figure 1. Three roll bending machine - top roll open.

Workpiece Description

The machine used in the testing program produces corrugated product. The outside diameter of the rolls was 18.7 cm (7.38 in.) which leads to a minimum cylinder diameter of approximately 20.3 cm (8 in.). There is no limit on the maximum cylinder diameter or on the radius of a workpiece segment. The test machine has a maximum width capacity of 61 cm (24 in.) and would typically be used with three different roll styles. The various corrugation profiles are used with plate thicknesses from 16 gage to 8 gage.[1] For 61 cm (24 in.) full width flat plates, the plastic section modulus varies between 0.396 cm^3 (0.024 $in.^3$) and 2.78 cm^3 (0.169 $in.^3$) for 16 gage and 8 gage respectively. The plastic section modulus for 61 cm (24 in.) full width corrugated plates constructed using a sine wave base curve with a 1.27 cm (0.5 in.) amplitude and a pitch of 6.76 cm (2.66 in.) are 4.02 cm^3 (0.245 $in.^3$) and 8.28 cm^3 (0.505 $in.^3$) respectively for 16 gage and 8 gage materials.

TEST PROGRAM

Purpose

The primary purpose of the following test program was to establish various failure modes associated with the use of general purpose barrier guards. A secondary goal was to develop a feeling for the magnitude of the hazards encountered. Shear hazards associated with the leading edge of the formed cylinders were illustrated using summer sausages with an average guillotine shear resistance of 449 N (101 lb). The actual leading edge forces are never less than:

$$F = \frac{s_o Z_p}{d}$$

where F = leading edge force
s_o = yield strength
Z_p = plastic section modulus of full width workpiece
d = formed cylinder diameter

Using a 50.8 cm (20 in.) diameter 61 cm (24 in.) full width sine corrugation, the minimum leading edge force varies between 1.80 kN (404 lb) and 3.71 kN (833 lb) for 16 gage and 8 gage thicknesses respectively. The material was taken as grade A galvanized ASTM A446 with a minimum yield point of 230 MPa (33 ksi).[4]

Proposed Universal Barrier Guard Descriptions

U.S. Naval Academy Guard. The variable position universal barrier guard system proposed by the U.S. Naval Academy shown in Fig. 2 is comprised of an expanded metal guard and sheet metal awareness barrier which is manually adjusted with spring-loaded pins at fixed locations along the length of a steel feed table supported by the machine front tie rod and a single leg. Select critical dimensions of the U.S. Naval Academy guarding system are displayed in Fig. 3 for reproducibility. If the utility of a general purpose three roll bender is compromised by the U.S. Naval Academy barrier guard, it can be rotated into a stowage position at the outboard end of the feed table.

Bethlehem Steel Guard. The universal barrier guard system developed by Bethlehem Steel depicted in Fig. 4 consists of an expanded metal guard and sheet metal awareness barrier which is set at a fixed position from the infeed nip point on a steel feed table supported by the machine front tie rod and two legs. A layout of the Bethlehem Steel guarding system is displayed in Fig. 5. Conforming to guarding theory, the opening between the bottom of the guard and the table top is set at 3.68 cm (1.45 in.) and the distance from the rear of the guard to the infeed nip point is fixed at 40.6 cm (16.0 in.).

Failure Modes and Effects

Shear on Front Face of Barrier Guard. On a general purpose roll bender, one can produce workpiece diameters which will allow the leading edge to contact the front face of a barrier guard regardless of its horizontal position. This is illustrated in Fig. 6. For stiff cylinders, the sharp leading edge produces a shear point hazard which can amputate the operator's hand. This action is shown in Fig. 7 using a summer sausage and the front face of the U.S. Naval Academy guard.

Shear on Top of Barrier Guard. Unless you have a dedicated roll-bending machine, a workpiece diameter always exists that will allow the leading edge to contact the top of a barrier guard at a given horizontal position as depicted in Fig. 8. Fig. 9 presents a severed summer sausage created by the shearing action between the sharp leading edge of the workpiece and the top of the U.S. Naval Academy guard.

Leading Edge Shear on Rear Face of Barrier Guard. On a general purpose roll bender with a fixed position barrier guard, the guard can be struck by the leading edge of the workpiece if its radius is slightly larger than the distance between the rear face of the guard and the centerline of the top roll as illustrated in Fig. 10. The resulting shear point hazard created by the leading edge of the cylinder and the rear face of the fixed Bethlehem Steel guard is shown in Fig. 11.

Trailing Edge Shear on Rear Face of Barrier Guard. When the direction of the rolls

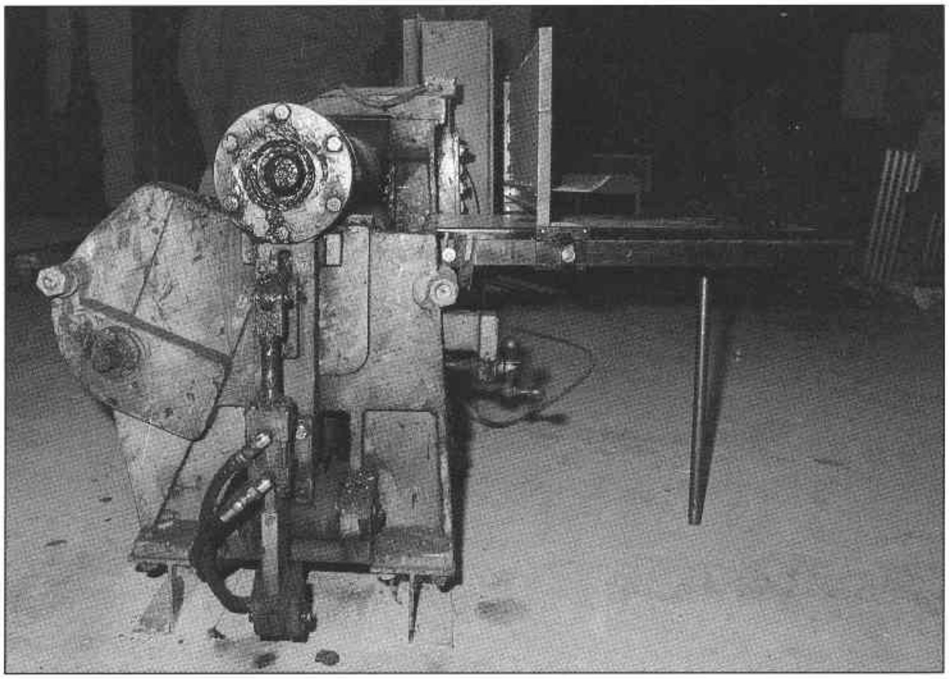

Figure 2. U.S. Naval Academy guard - variable position.

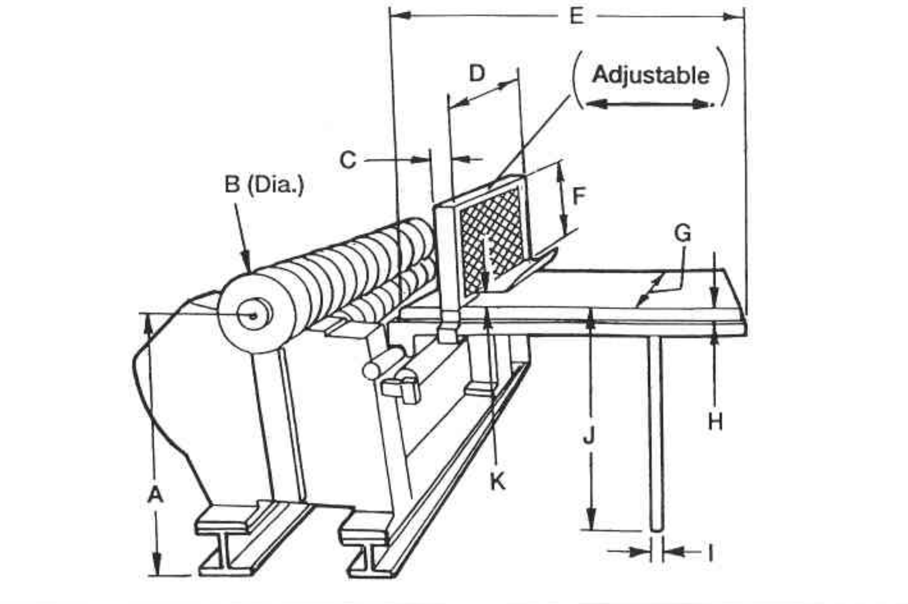

A = 87.9 cm (34.6 in.)
B = 18.7 cm (7.38 in.)
C = 2.54 cm (1.0 in.)
D = 91.4 cm (36.0 in.)
E = 85.1 cm (33.5 in.)
F = 30.5 cm (12.0 in.)
G = 55.9 cm (22.0 in.)
H = 5.72 cm (2.25 in.)
I = 3.18 cm (1.25 in.)
J = 81.3 cm (32.0 in.)
K = 8.26 cm (3.25 in.)

Figure 3. U.S. Naval Academy guard - variable position.

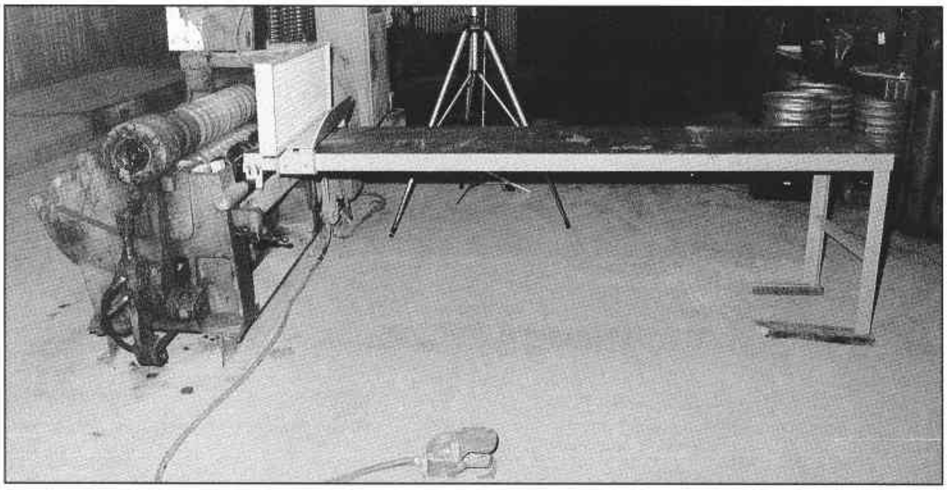

Figure 4. Bethlehem Steel guard - fixed position.

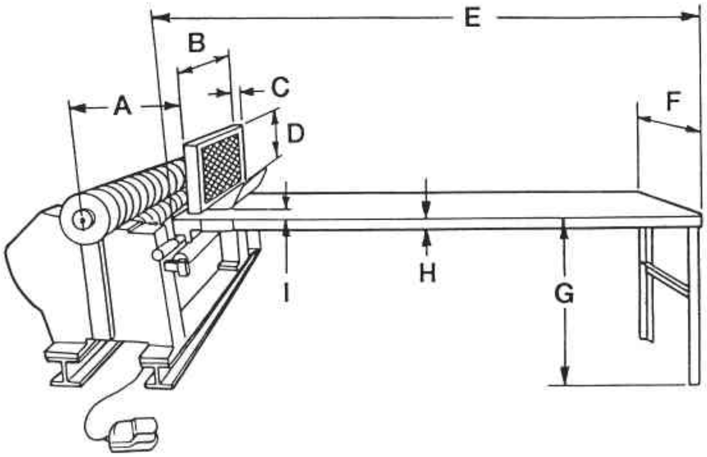

A = 40.6 cm (16.0 in.)
B = 91.4 cm (36.0 in.)
C = 2.54 cm (1.0 in.)
D = 33.0 cm (13.0 in.)
E = 126 cm (49.5 in.)
F = 55.4 cm (21.8 in.)
G = 81.3 cm (32.0 in.)
H = 5.72 cm (2.25 in.)
I = 3.68 cm (1.45 in.)

Figure 5. Bethlehem Steel guard - fixed position.

on a general purpose roll-bending machine is reversed, there are a plethora of workpiece profiles that will cause the leading edge of the workpiece to contact a fixed position barrier guard as in Fig. 12. Fig. 13 depicts the trailing edge shear hazard as the trailing edge of the workpiece moving counterclockwise slices the vertical summer sausage against the rear face of the fixed Bethlehem Steel guard.

Pinch Point Hazard Beneath Barrier Guard. When the opening beneath the table top and the bottom of the barrier guard is large enough to admit the operator's fingers when the workpiece is in place, reversing the workpiece causes the trailing region to lift against the upper slot opening and generate injury producing pinch forces. The pinch point hazard beneath the guard is shown in Fig. 14. The Bethlehem Steel guard, for example, produces a 5.05 kN (1134 lb) pinch force for a 61 cm (24 in.) full width, 8 gage, 230 MPa (33 ksi) sine corrugation. On a general purpose roll bender with a barrier guard, a workpiece profile always exists that will allow the trailing region to lift against the bottom of the guard and produce a pinch point hazard.

Impact Hazard. An impact hazard is created when the leading edge of the part contacts the top of the barrier guard and holds itself in position until the trailing edge releases from the rollers. This extraordinary phenomenon is characterized in Fig. 15. The resulting distorted cylinder possesses sufficient stored elastic energy to spring out of the roll-bending machine and contact operators and bystanders. Fig. 16 depicts the impact hazard as the distorted corrugated cylinder springs out toward the rear of the machine after contacting the top of the Bethlehem Steel guard.

Table Lift Hazard. Before the trailing edge of a workpiece passes through the opening between the bottom of the guard and the table top, any reversal in rotation will lift the trailing edge against the upper slot opening. The resulting forces are transferred to the entire U.S. Naval Academy guard-table assembly causing the free-standing table to be raised and rotated counterclockwise as shown in Fig. 17. The safety of an operator is compromised as illustrated in Fig. 18 if he is positioned within the table's trajectory. Indeed, offloaders and bystanders are exposed to an impact hazard because the U.S. Naval Academy guard and the Bethlehem steel guard will be thrown to the rear of the machine.

Drag-in Hazard. Shearing of the workpieces may produce burrs which can snag workgloves. The resulting drag-in force cannot be resisted by operators since gloves can produce several thousand Newtons (lb) of resistance. The drag-in hazard is illustrated in Fig. 19 and Fig. 20 as an operator's glove has become attached to the workpiece which is being fed into the machine. Guards cannot control hazards of this type and typically are the agent which amputates an operator's hand.

CONCLUSION

Shear Hazard

Shearing occurs when the leading or trailing edges of the workpiece contact various portions of the barrier guard. For any fixed position guard, it is clear that forming diameters may be found that will contact every portion of the guard. The resulting shear hazards have severities that can be determined analytically using the theory of circular arches. As expected, the magnitude of the shear hazard increases as the

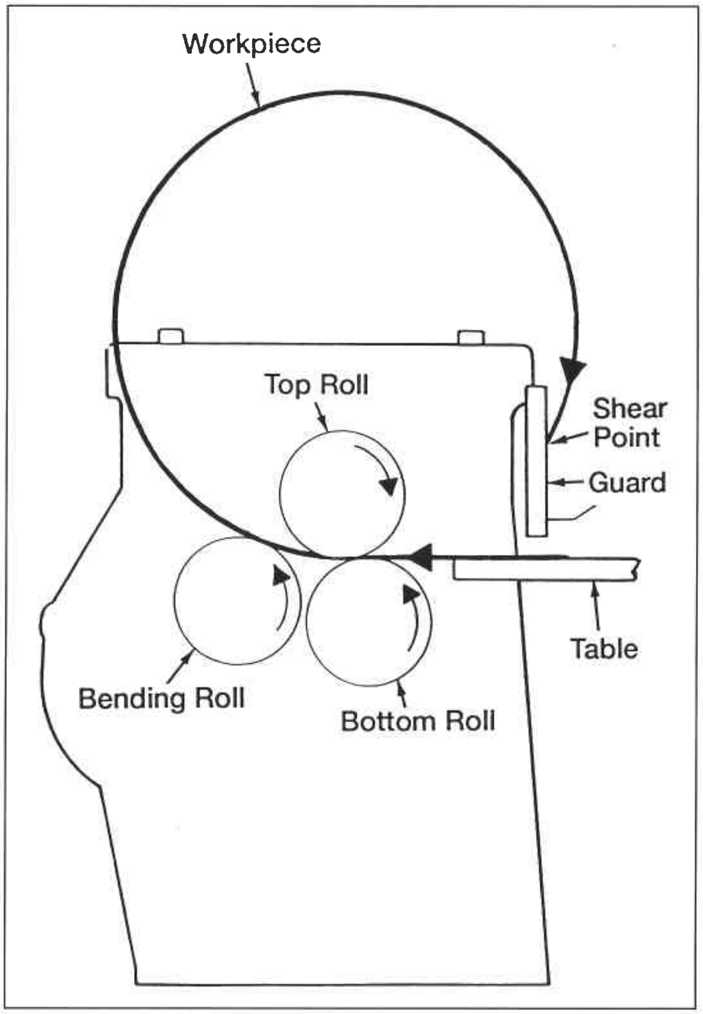

Figure 6. Shear on front face of guard.

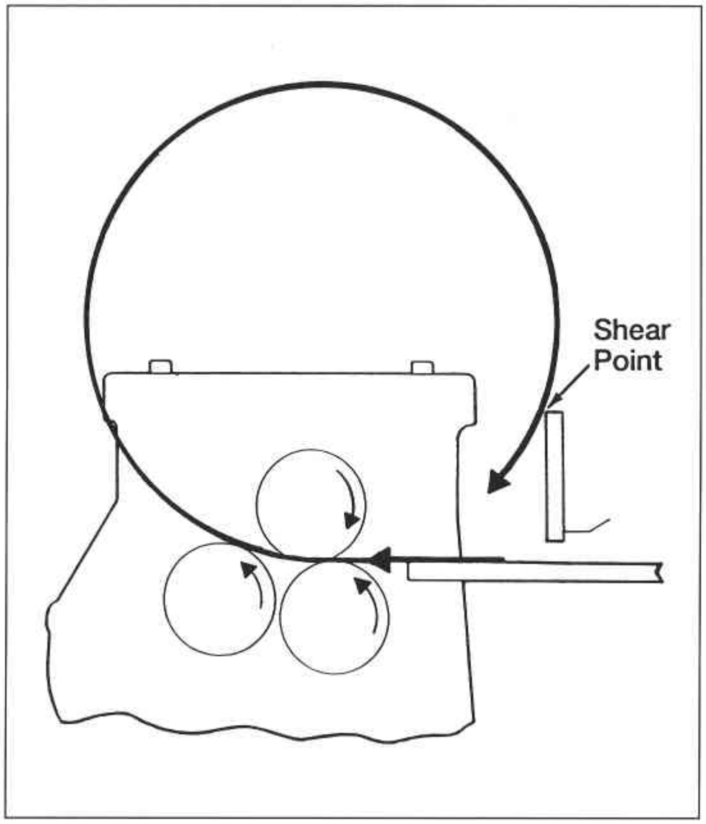

Figure 8. Shear on top of guard.

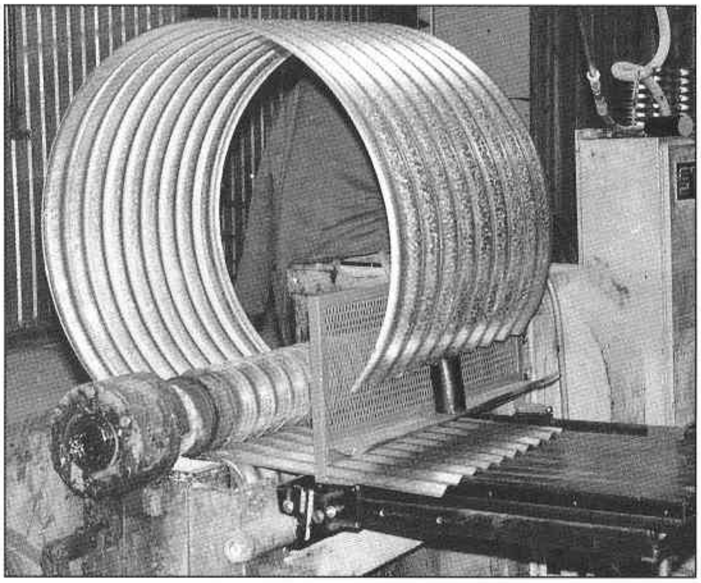

Figure 7. Shear on front face of guard.

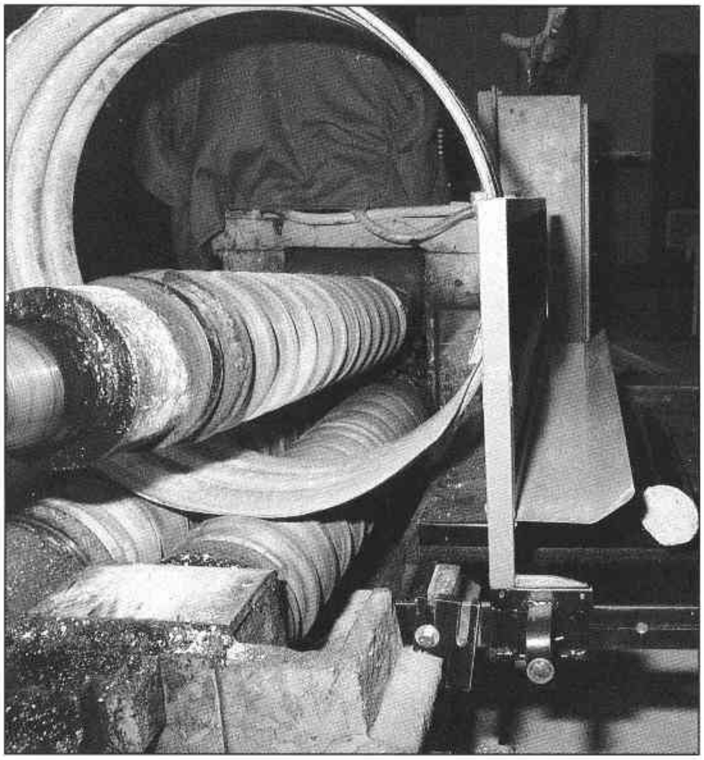

Figure 9. Shear on top of guard.

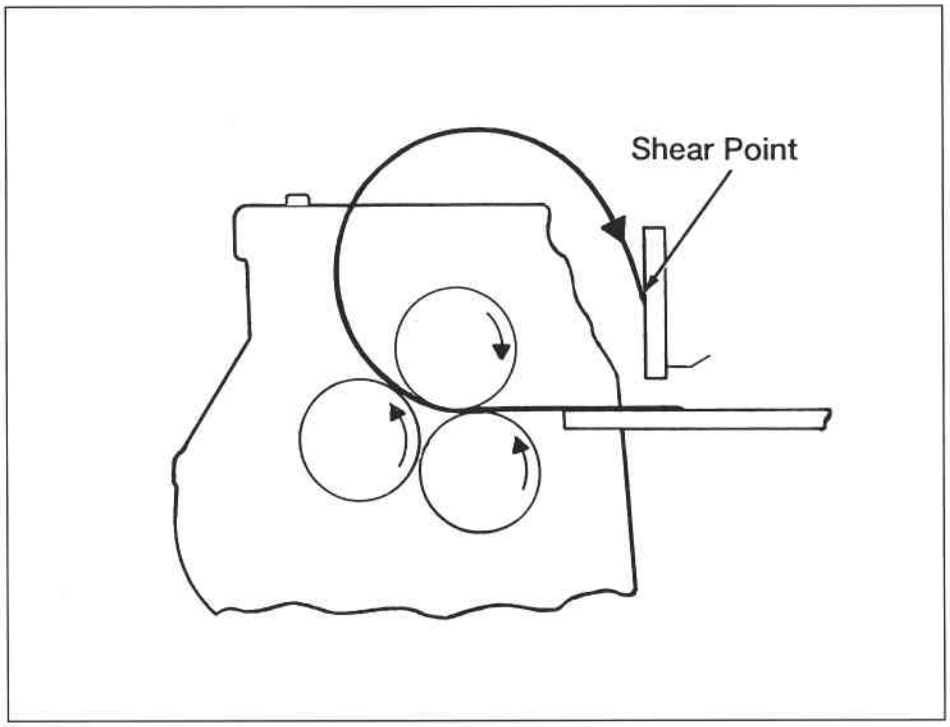

Figure 10. Leading edge shear on rear face of guard.

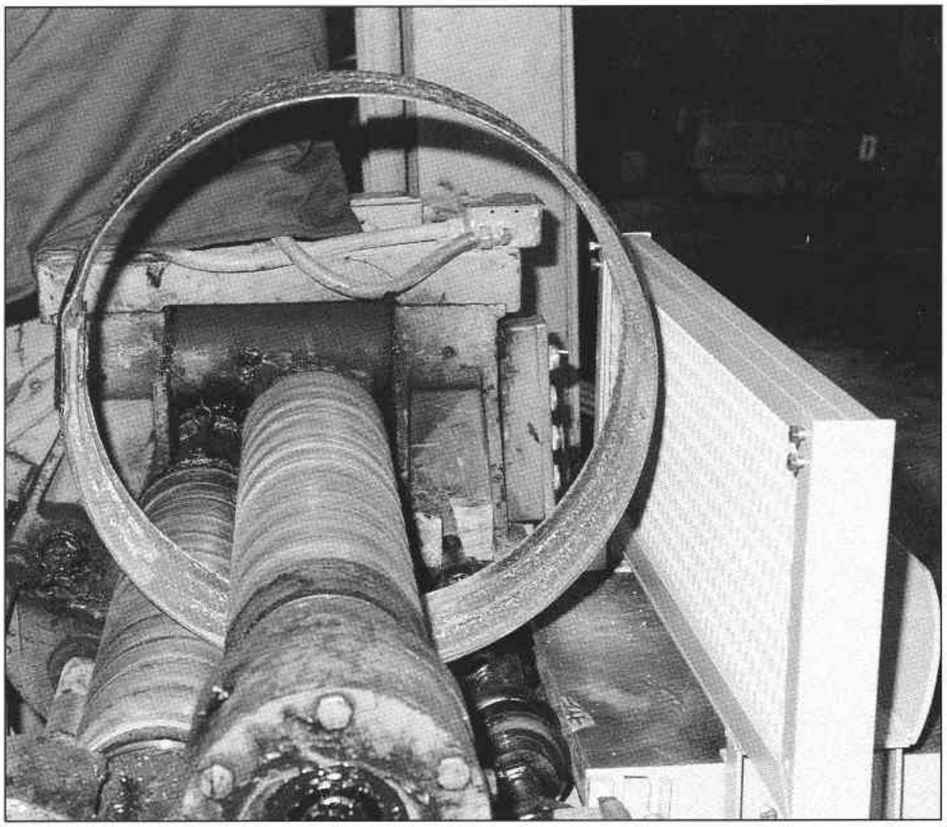

Figure 11. Leading edge shear on rear face of guard.

diameter of the workpiece gets smaller, as the exposed arc length gets shorter, as the material thickness increases, as the corrugation depth gets larger, and as the yield strength gets larger. The shear hazard is severe over a wide range of corrugated roll parameters. For equal thickness flat plates, the hazard magnitude is less severe but may be critical.

Pinch Hazard

When openings beneath the guard are large enough to admit the operator's fingers when the workpiece is in place, reversing the workpiece causes the trailing region to lift against the upper slot opening. Very high pinch forces can be generated in this way. It should be noted that the U.S. Naval Academy guard and the Bethlehem Steel guard both used fixed slot heights that admitted fingers with the workpiece in the slot. This opening can, of course, be made adjustable. The operator must set the slot height to accommodate the sine wave height, 1.27 cm (0.5 in.) in our case, the workpiece thickness, any crowning or arching of the workpiece, and a minimum clearance dimension. If the arching or crowning is not severe, minimum clearance may be set below 6.35 mm (0.25 in.) to preclude the pinch hazard by excluding fingers. On the other hand, the total opening or slot height must be checked against guarding theory criteria which specifies a minimum distance between the guard and the nip point for each slot height.[5,6] The idea is to prevent injuries when the workpiece is not present by moving the guard a "safety distance" from the infeed nip. It is fortunate that the pinch hazard will not commonly be encountered since the workpiece is normally drawn into the machine and beyond the guard before reversal takes place. The principal hazard is caused by the reversed trailing edge touching the rear face of the guard.

Impact Hazard

A phenomenon related to the pinch hazard involves lifting and throwing the entire table. Reversal of the workpiece while it is still under the guard produces a lifting force that can pick up the table, rotate it through 180°, and throw it to the rear of the machine. Any operator within the trajectory of the table is in jeopardy. Clearly, the table must be bolted to the floor to control this hazard. Furthermore, the guard itself must not be capable of being lifted or separated from the table or it can become a missile. Finally, we encountered a surprising failure

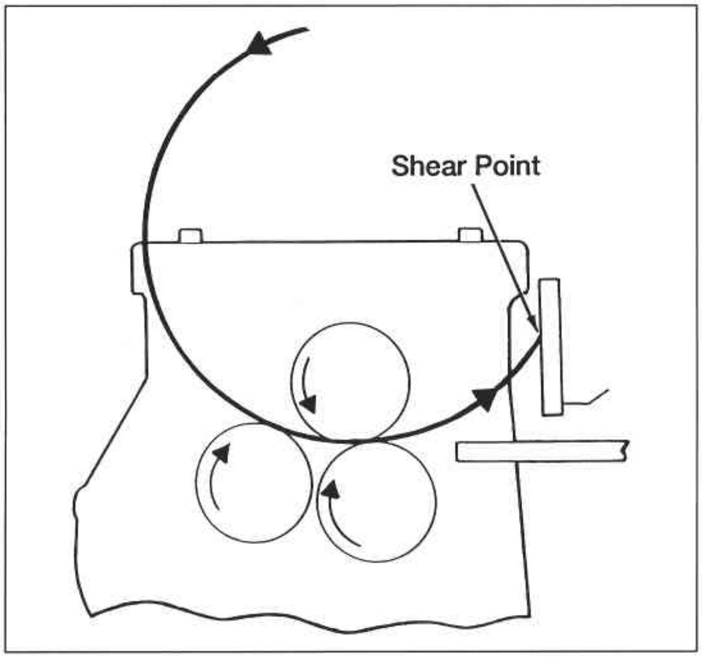

Figure 12. Trailing edge shear on rear face of guard.

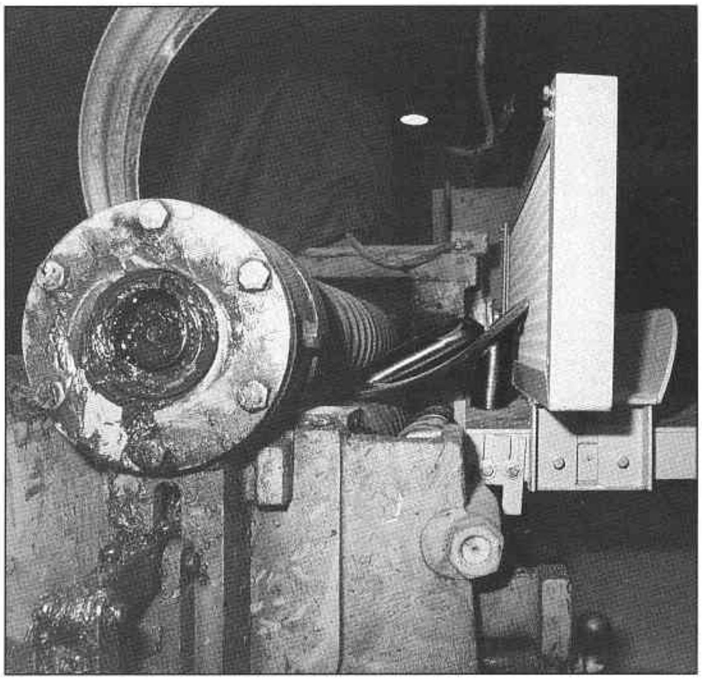

Figure 13. Trailing edge shear on rear face of guard.

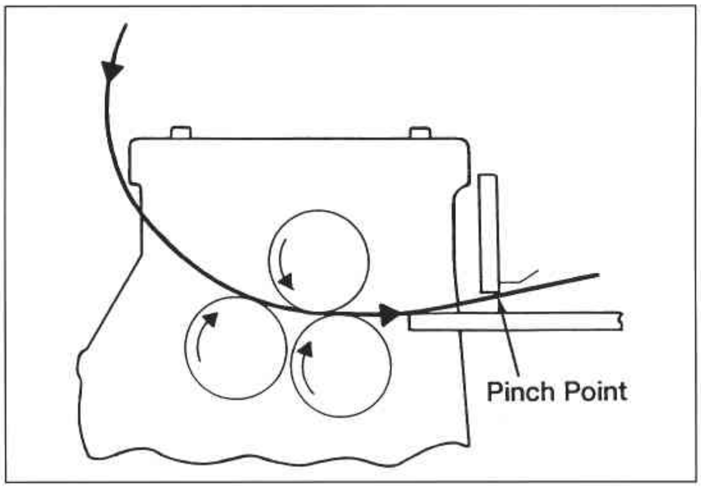

Figure 14. Pinch point hazard beneath guard.

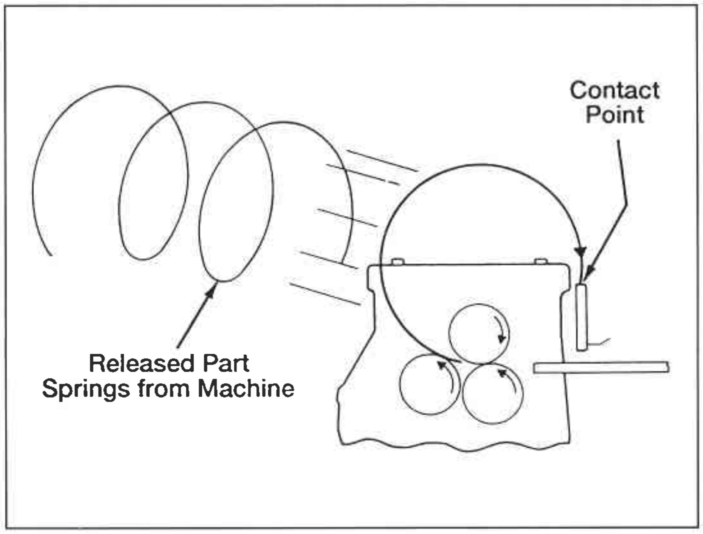

Figure 15. Impact hazard.

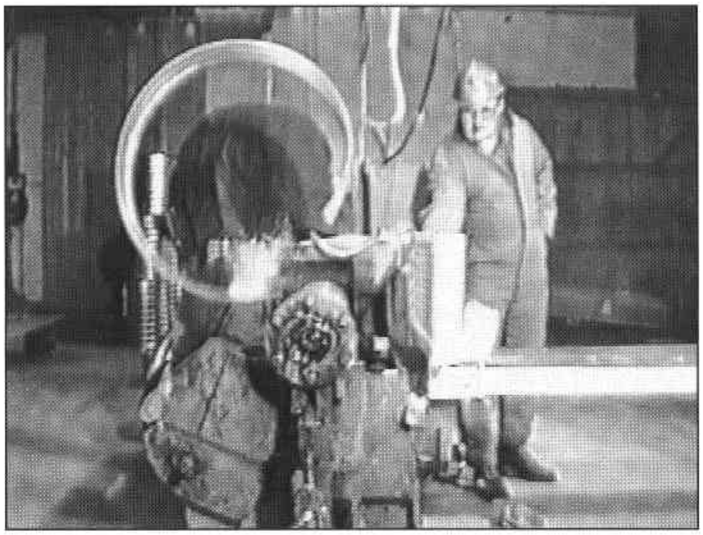

Figure 16. Impact hazard.

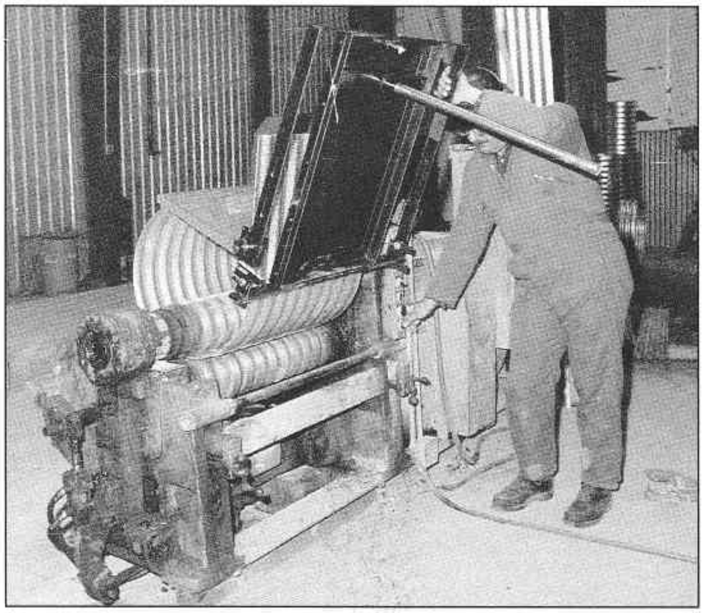

Figure 17. Table lift hazard.

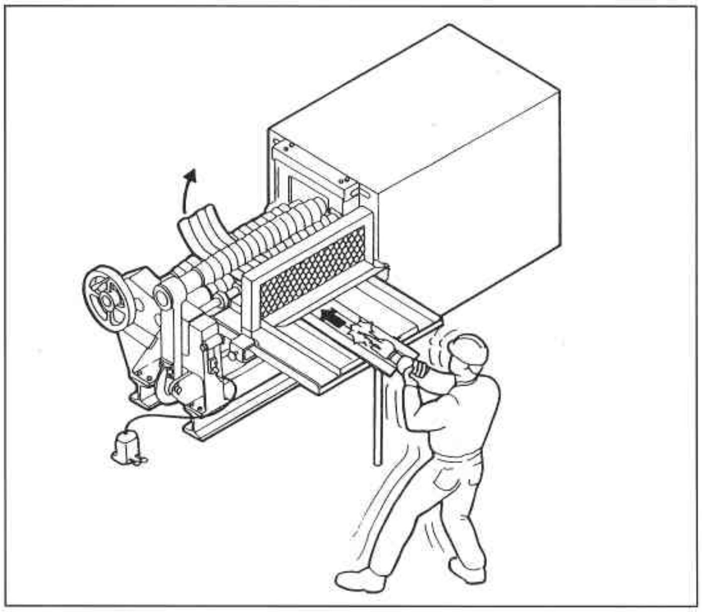

Figure 19. Drag-in hazard.

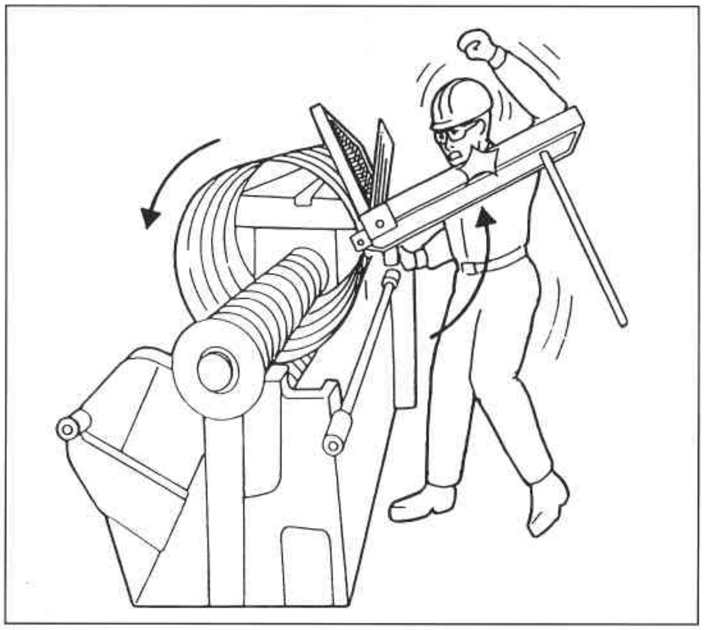

Figure 18. Table lift hazard.

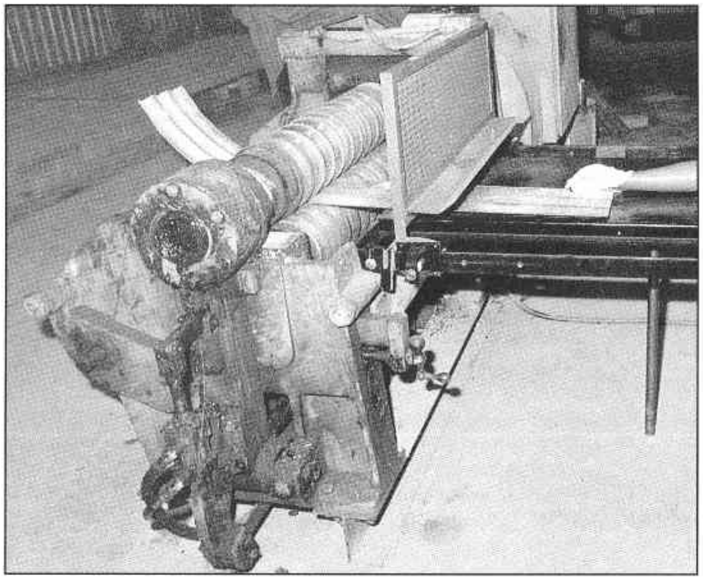

Figure 20. Drag-in hazard.

mode when the leading edge of the part contacted the top of the guard and held itself in position until the trailing edge was released from the rollers. The resulting distorted cylinder stored sufficient elastic energy to spring 6 m (20 ft) to the rear of the machine leading to an impact hazard.

Drag-In Hazard

The drag-in phenomenon is a classical hazard associated with all inrunning webs including fabrics, paper, reinforcing rods, and ropes. Typically, the operator's body or clothing becomes snagged or attached to the inrunning web which provides a pulling force involving the full power of the machine. Attempts to control this hazard with barrier guards and inrunning nip guards produce the so-called "irresistible force meeting the immovable object." Under these circumstances, amputations are created by the guard itself. The operator's safety is compromised slightly by the reduced escape time available when a guard is present compared to the escape time available when the only hazard is the inrunning nip. The proposed guards unfortunately block the corridors to the emergency stop systems making the operator vulnerable in the drag-in scenario.

Guarding Hypothesis

The introduction of the various severe hazards by the guard itself establishes the validity of the ANSI B11.12-1983 statement: "No universal method of safeguarding the point of operation for general purpose roll benders is known at this time." It should be noted that designers and manufacturers are prohibited from using type IV safeguard devices, i.e., guards which sometimes increase safety and sometimes compromise it.[7] Here, a value system is required to weigh the upside and downside of such safeguard devices and give permission for their use when the advantages are sufficiently compelling.

Geometric Restrictions on Barrier Guards

There are three methods for removing a completed workpiece from a three roll bender. For closed or overlapping cylinders, the end gate must be opened and the cylinders removed from the left side of the machine. For incomplete or segments of cylinders, the workpieces may be offloaded from the rear of the machine. Finally, cylinder segments may be reversed out of the front of the bender. The parts removal function demands that fixed barriers be open on the rear and left side. The reversing method will cause the front guard to be moved far enough away from the inrunning nip to avoid contact with the reversing trailing edge of the workpiece. Because the diameter of a formed cylinder on a general purpose machine is not really limited, covers over the top of the machine are contraindicated. Note that both the Bethlehem Steel and the U.S. Naval Academy guards have open backs, sides, and tops.

Dedicated Guards

It is always possible on a dedicated function machine to locate a front barrier guard sufficiently far from the inrunning nip that the shear hazard, the pinch hazard, and the impact hazards are eliminated. Unfortunately, such guards offer very limited protection. The rear, side, and top of the machine provide direct corridors to the points of operation. Furthermore, the workers may still reach over or to the side of the front barrier between the machine and the guard. This circumvents the guarding and allows direct access to the inrunning nip.

With respect to the drag-in hazard, intervention cannot be accomplished with barriers. Here, emergency stop systems on the front face of the machine provide the necessary protection. The guard-table systems proposed by Bethlehem Steel and the U.S. Naval Academy completely cover the area where such emergency stop systems are traditionally located.

Is it reasonably foreseeable that a dedicated machine will be used for an unintended workpiece? Under such circumstances, the dedicated guard may not protect; indeed, it may introduce new hazards into the system. It must be emphasized that the judicial value system requires machines to be designed for their reasonably foreseeable use which includes their reasonably foreseeable misuse.

REFERENCES

1. "American National Standard for Machine Tools - Roll-Forming and Roll-Bending Machines - Safety Requirements for Construction, Care, and Use," *ANSI B11.12-1983*, New York, American National Standards Institute, approved Aug. 15, 1983, p. 18.

2. Barnett, R. L. and Hamilton, B.A., "Philosophical Aspects of Dangerous Safety Systems," *Proceedings of the Region III Professional Development Conference*, American Society of Safety Engineers, Feb. 6, 1984, pp. 36-41.

3. "American National Standard for Machine Tools - Roll-Forming and Roll Bending Machines - Safety Requirements for Construction, Care, and Use," *ANSI B11.12-1983*, New York, American National Standards Institute, approved Aug. 15, 1983, p. 19.

4. "Standard Specification for Steel Sheet, Zinc-Coated (Galvanized) by the Hot-Dip Process, Structural (Physical) Quality," *ASTM A446/A446M-85*, Philadelphia, American Society for Testing and Materials, adopted Sept. 27, 1985, pp. 110-113.

5. "American National Standard for Machine Tools - Roll-Forming and Roll-Bending Machines - Safety Requirements for Construction, Care, and Use," *ANSI B11.12-1983*, New York, American National Standards Institute, approved Aug. 15, 1983, p.25.

6. "Safe Openings for Some Point of Operation Guards," *Technical Guide No. 2*, Chicago, American Mutual Insurance Alliance, May 1966, pp. 1-16.

7. Barnett, R.L. and Barroso, P., "On Classification of Safeguard Devices - Intrinsic Classification," *Proceedings of the Region III Professional Development Conference*, American Society of Safety Engineers, Feb. 6, 1984, pp. 26-29.

What is a Defect?

The definition of a defective product in a state may be found in the case law of that state. In our Safety Briefs, we explore leading product liability case law for one or more states. Triodyne Inc. relies on the trial bar for selection of the cases cited.

OHIO

Effective January 5, 1988, the Ohio General Assembly codified Ohio product liability law, as part of a tort reform package. Pursuant to Ohio Rev. Code § 2307.73, in order for a plaintiff to prevail on a product liability claim, the plaintiff must prove both that the product was defective (in one of four ways), and that a defective aspect of the product was a proximate cause of "harm" for which the claimant seeks to recover compensatory damages. The term "harm" is defined (in Ohio Rev. Code § 2307.71(G)) as meaning "death, physical injury to person, serious emotional distress, or physical damage to property other than the product in question. "Harm" is distinguished from "economic loss," which is defined (in Ohio Rev. Code § 2307.71(B)) as meaning direct, incidental, or consequential pecuniary loss, including . . . damage to the product in question, and nonphysical damage to property other than that product."

As noted above, there are four ways in which a product may be proven defective. A product may he defective in manufacture or construction, defective in design or formulation, defective due to inadequate warning or instruction, or defective because of failure to conform to a representation made by its manufacturer.

Manufacturing defect claims are governed by Ohio Rev. Code § 2307.74, which provides:

> A product is defective in manufacture or construction if, when it left the control of its manufacturer, it deviated in a material way from the design specifications, formula, or performance standards of the manufacturer, or from otherwise identical units manufactured to the same design specifications, formula, or performance standards. A product may be defective in manufacture or construction as described in this section even though its manufacturer exercised all possible care in its manufacture or construction.

Note that the foregoing statute requires that the product deviate "in a material way" from its design specifications. Thus, an insignificant or customary deviation from design specifications is not actionable. This point was addressed in *In Re Air Crash Disaster at Sioux City. Iowa,* 781 F. Supp. 1307 (N.D. Ill. 1991), which arose out of the July 19, 1989 crash of United Airlines flight 232 in Sioux City, Iowa. The court, construing Ohio law, observed:

> A literal application of § 2307.74 requires that plaintiffs establish that the flaw constitutes a material deviation from design specification or industry performance standards. Evidence exists in the record that it is well known among users of titanium that titanium ingot has a certain incidence of hard alpha inclusion . . . Moreover, evidence in the record suggests that users of titanium ingot are generally aware that it is not possible to completely eliminate hard alpha inclusions and that these inclusions may pass the most rigorous inspection processes undetected . . . However, because of titanium's other metallurgical qualities, the aircraft industry often specifies the use of titanium over other metals despite the incidence of inclusions . . . This evidence inferentially suggests a general aircraft industry acceptance of titanium containing some degree of hard alpha inclusion in products manufactured from titanium.

Because of the evidence of industry acceptance of titanium containing some degree of defect, the court denied the plaintiffs' Motion for Summary Judgment as to their claim of manufacturing defect.

Design defect claims are governed by Ohio Rev. Code § 2307.75, which provides in pertinent part:

(A) Subject to divisions (D), (E), and (F) of this section, a product is defective in design or formulation if either of the following applies:

1. When it left the control of its manufacturer, the foreseeable risks associated with its design or formulation as determined pursuant to division (B) of this section exceeded the benefits associated with that design or formulation as determined pursuant to division (C) of this section;
2. It is more dangerous than an ordinary consumer would expect when used in an intended or reasonably foreseeable manner.

(B) The foreseeable risks associated with the design or formulation of a product shall be determined by considering factors including, but not limited to, the following:

1. The nature and magnitude of the risks of harm associated with that design or formulation in light of the intended and reasonably foreseeable uses, modifications, or alterations of the product;
2. The likely awareness of product users, whether based on warnings, general knowledge, or otherwise, of those risks of harm;
3. The likelihood that that design or formulation would cause harm in light of the intended and reasonably foreseeable uses, modifications, or alterations of the product;
4. The extent to which that design or formulation conformed to any applicable public or private product standard that was in effect when the product left the control of its manufacturer.

(C) The benefits associated with the design or formulation of a product shall be determined by considering factors including, but not limited to, the following:

1. The intended or actual utility of the product, including any performance or safety advantages associated with that design or formulation;
2. The technical and economic feasibility, when the product left the control of its manufacturer, of using an alternative design or formulation;
3. The nature and magnitude of any foreseeable risks associated with such an alternative design or formulation.

In addition, the statute provides that unavoidably unsafe drugs or medical devices are not defective if an adequate warning is provided, that a product is not defective in design if the subject damages were caused by an inherent characteristic of the product which cannot be eliminated without substantially compromising the product's usefulness and which is recognized by an ordinary person, and that a product is not defective if there was not practical and technically feasible alternative design available.

Ohio's design defect statute to a large extent codifies prior Ohio law on product liability design defect claims. With respect to prior law, the Ohio Supreme Court adopted Restatement (Second) of Torts Section 402A in *Temple v. Wean United*, Inc., 50 Ohio St. 2d 317, 364, N.E.2d 267(1977). In *Leichtamer v. American Motors Corp.*, 67 Ohio St. 2d 456,424 N.E.2d 568(1981), the Ohio Supreme Court adopted the consumer expectation test for design defect claims. One year later, in *Knitz v. Minster Machine Co.*, 69 Ohio St. 2d 460,432 N.E.2d 814 (1982), the court recognized the risk-benefit test in addition to the consumer expectation test. In *Cremeans v. International Harvester Co.*, 6 Ohio St. 3d 232,452 N.E.2d 1281(1983), the Court made clear that the risk-benefit and consumer expectation analyses constitute "a single, two-prong test for determining whether a product design is in a defective condition." Thus, under both former and present Ohio law, a plaintiff need only prove that a product violates either the risk-benefit or consumer expectation tests in order to prevail.

Claims alleging product defect due to failure to warn are governed by Ohio Rev. Code § 2307.76, which provides in pertinent part:

(A) Subject to divisions (B) and (C) of this section, a product is defective due to inadequate warning or instruction if either of the following applies:

1. It is defective due to inadequate warning or instruction at the time of marketing if, when it left the control of its manufacturer, both if the following applied:

   a. The manufacturer knew, or in the exercise of reasonable care, should have known about a risk that is associated with the product that allegedly caused harm for which the claimant seeks to recover compensatory damages;

   b. The manufacturer failed to provide the warning or instruction that a manufacturer exercising reasonable care would have provided concerning that risk, in light of the likelihood that the product would cause harm of the type for which the claimant seeks to recover compensatory damages and in light of the likely seriousness of that harm.

Sub-division (2) of the statute addresses claims for inadequate post-marketing warning or instruction, and again imposes a standard of "reasonable care," which is essentially a negligence standard.

Pursuant to Ohio Rev. Code § 2307.76(B), there is no liability for failure to warn as to "an open and obvious risk or a risk that is a matter of common knowledge." In addition, pursuant to sub-section (C) of the statute, a drug manufacturer generally is not liable if it provides an adequate warning to a physician, rather than to the ultimate user of the product.

Under prior Ohio law, the Ohio Supreme Court held that a failure to warn claim could sound in either strict liability or negligence, but that in either case the standard of liability is a negligence standard — the plaintiff must prove that the manufacturer failed to take the precautions that a reasonable person would take in presenting the product to the public. *Crislip v. TCH Liquidating Co.*, 52 Ohio St. 3d 251,556 N.E.2d 1177(1990). The new statute, Ohio Rev. Code § 2307.76, continues to utilize this standard.

The final basis for establishing a product defect is set forth in Ohio Rev. Code § 2307.77, which provides:

> A product is defective if it did not conform, when it left the control of its manufacturer, to a representation made by that manufacturer. A product may be defective because it did not conform to a representation even though its manufacturer did not act fraudulently, recklessly, or negligently in making the representation.

There are not yet any reported Ohio cases construing this statute.

It should be observed that the recently enacted product liability statutes appear to supersede prior Ohio common law as to product liability claims. Thus, Ohio Rev. Code § 2307.72(A) provides that "any recovery of compensatory damages based on a product liability claim is subject to §§ 2307.71 to 2307.79 of the Revised Code." None of the product liability statutes allow for a claim of negligent design or negligent manufacture. Thus, it appears that Ohio law no longer allows for a claim for negligent design or negligent manufacture. As noted, the statute governing failure to warn claims continues to set forth a negligence standard. In addition, Ohio Rev. Code § 2307.78 allows for negligence claims against product suppliers. Finally, it should be observed that the new product liability statutes apply only to claims which arose on or after January 5, 1988, so the case law is still in its early stages of development.

Cases selected and summaries written by David L. Lester, Janik, Lester & Dunn, 1111 Chester Avenue, Cleveland, OH 44114. Telephone: (216) 781-9700.

SAFETY BRIEF

January 1994 – Volume 9, No. 3

Editor: Beth A. Hamilton

Illustrated and Produced by Triodyne Graphic Communications Group